EXTERIEUR / BALISES / SPOT & SPOT DUO / SPOT DUO

Code article 86.OB05.2311.02

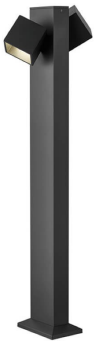

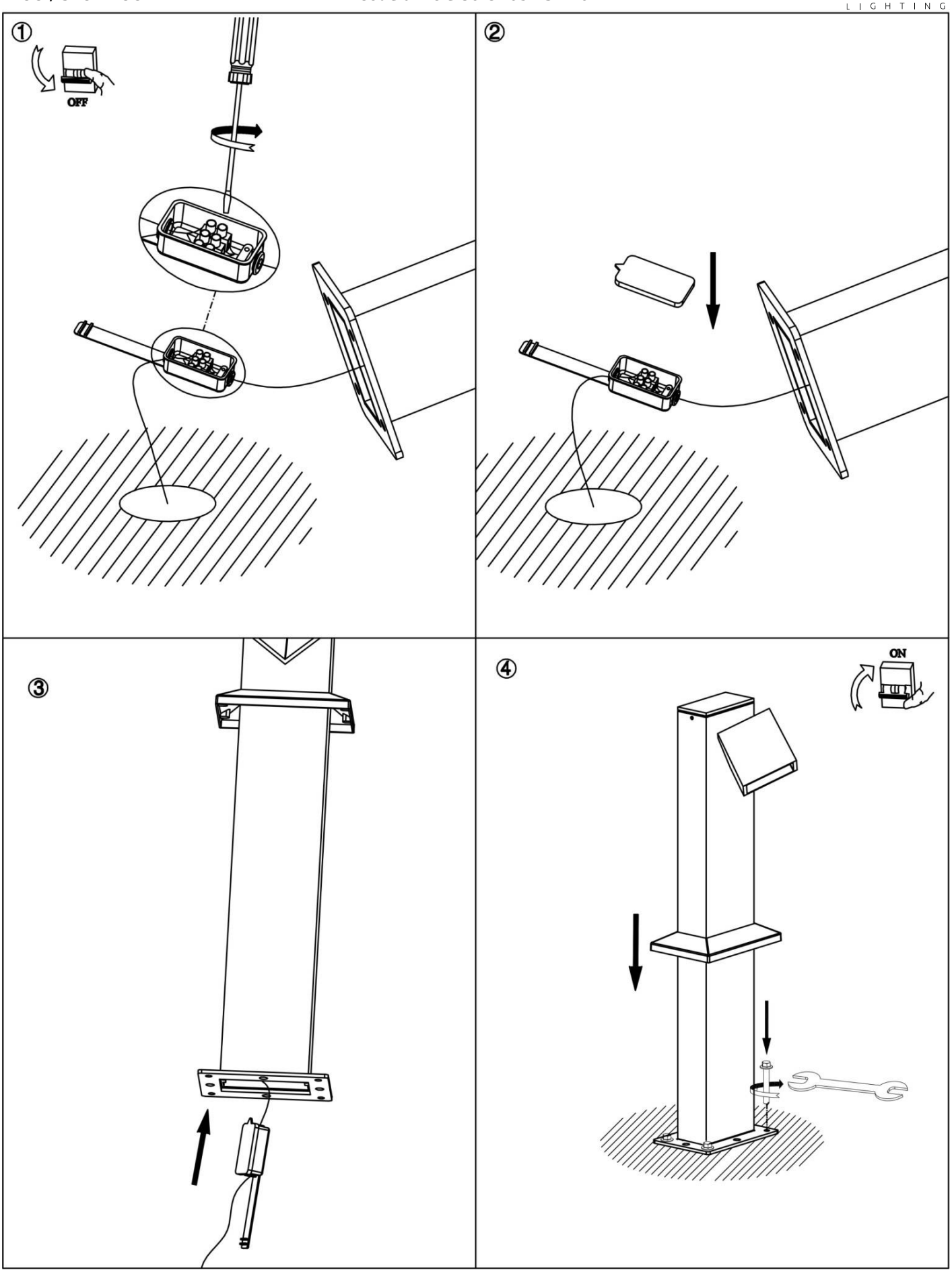
①
OFF
②
③
④
ON